STC 072

Extruded Supports

Width of PCB:
68 mm - 72 mm (2.677 in - 2.835 in)

Support Type:
EXTRUDED

Standard Colour:
GREEN

Thickness of PCB:
1.6 ÷ 2.8 mm (.063 ÷ .110 in)

STC072

Extruded Supports for 72 mm (2.835 in)

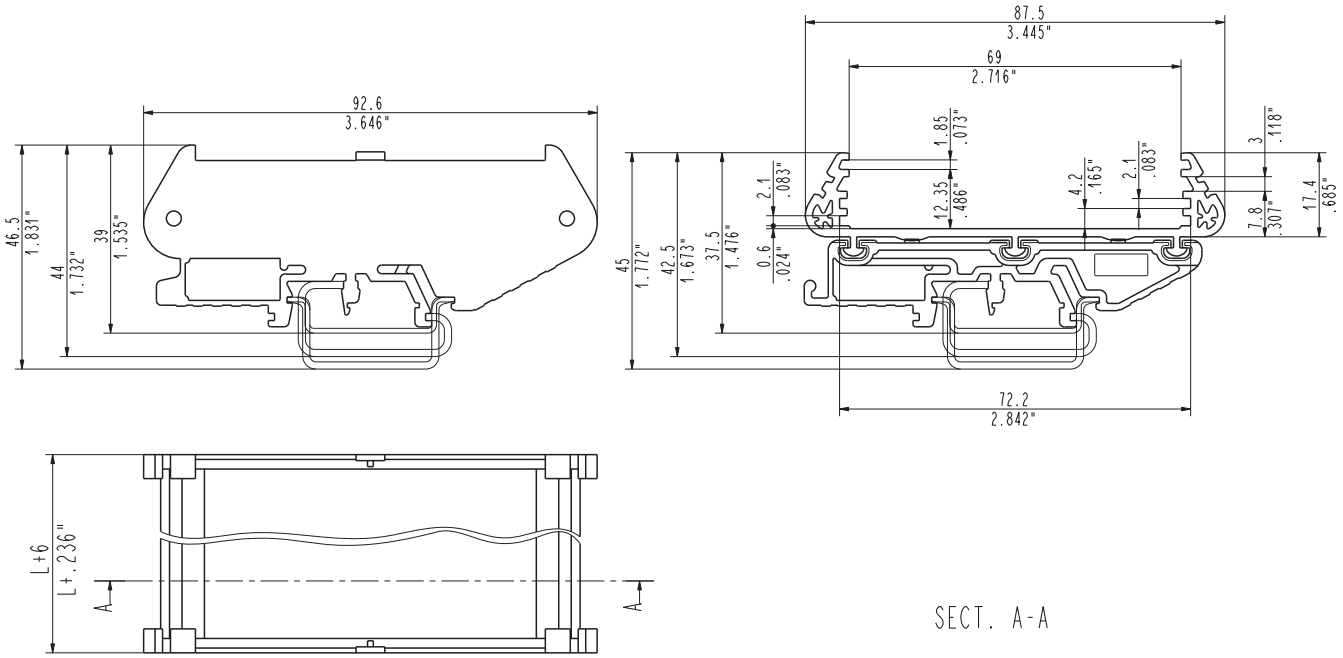

STC Parts

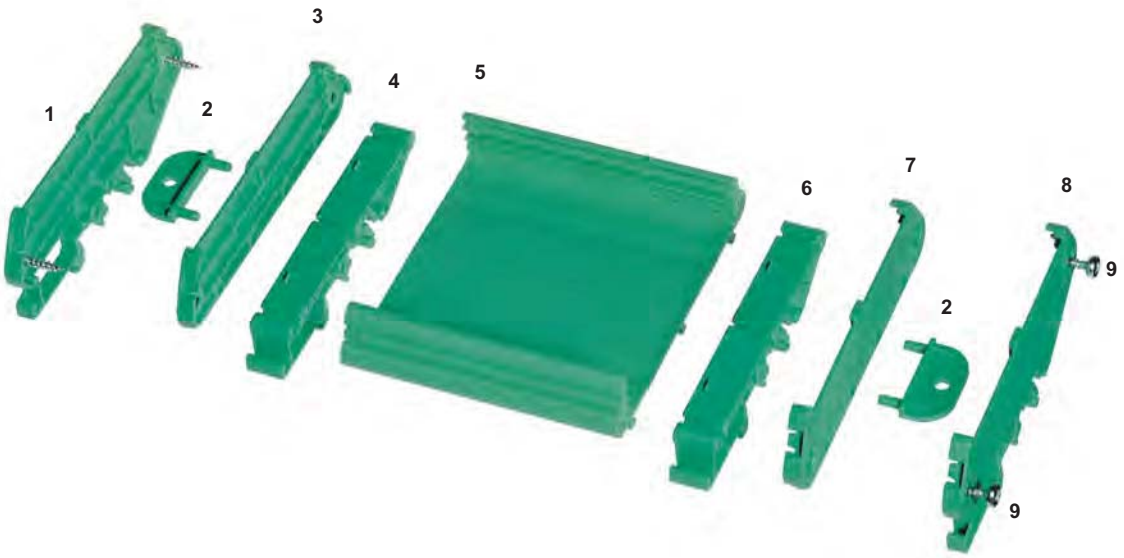

1	STC072TSX0
2	STC000F000
3	STC072T000
4	STC072P011
5	STC072S_ _ _
	STC0722000
	STC072L_ _ _
6	STC072P011
7	STC072T000
8	STC072TDX0
10	STC000V015

Custom Size Cut Extruded Profile

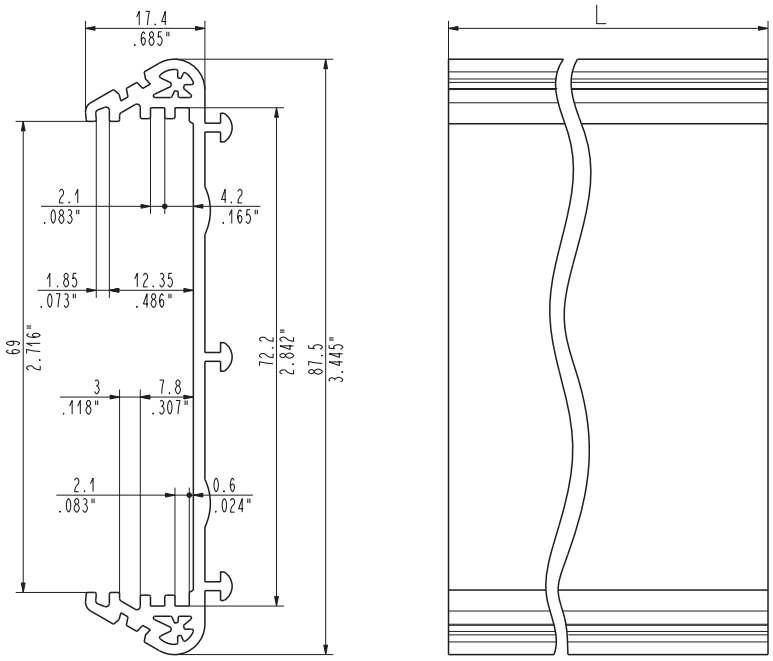

STC072S_ _ _
STC0722000
STC072L_ _ _

STC072S_ _ _ / STC0722000 / STC072L_ _ _

Custom Sized Cut Profile

For a Custom Sized Cut Profile, the length of the Central Body must be equal to the length of the PCB minus 3.5 mm (.138 inch). It's advised to round off the figure to the higher whole number.

The length of the support, including the Lateral Elements, is equal to the length of the Profile plus 6 mm (.236 inch).

Cut Profile sizes L		Part-Number	Pcs / pack	For PCB		Length of support	
(mm)	(in)			(mm)	(in)	(mm)	(in)
16,50	.650	STC072S016	50	20,00	.787	22,50	.886
27,75	1.093	STC072S028	50	31,25	1.230	33,75	1.329
39,00	1.535	STC072S039	50	42,50	1.673	45,00	1.772
50,25	1.978	STC072S050	50	53,75	2.116	56,25	2.215
61,50	2.421	STC072S061	50	65,00	2.559	67,50	2.657
72,75	2.864	STC072S073	50	76,25	3.002	78,75	3.100
84,00	3.307	STC072S084	50	87,50	3.445	90,00	3.543
95,25	3.750	STC072S095	50	98,75	3.888	101,25	3.986
106,50	4.193	STC072S106	50	110,00	4.331	112,50	4.429
117,75	4.636	STC072S118	50	121,25	4.774	123,75	4.872
129,00	5.079	STC072S129	50	132,50	5.217	135,00	5.315
140,25	5.522	STC072S140	50	143,75	5.659	146,25	5.758
151,50	5.965	STC072S151	50	155,00	6.102	157,50	6.201
162,75	6.407	STC072S163	50	166,25	6.545	168,75	6.644
174,00	6.850	STC072S174	50	177,50	6.988	180,00	7.087
Profile for PCB with L = 2 m (78.740 in)		STC0722000	10	--------	--------	--------	--------
Custom	Custom	STC072L_ _ _	100	L + 3,5	L +.137	L + 6	L +.236

STC 072

Extruded Supports

Lateral Element with Left Rail Hook

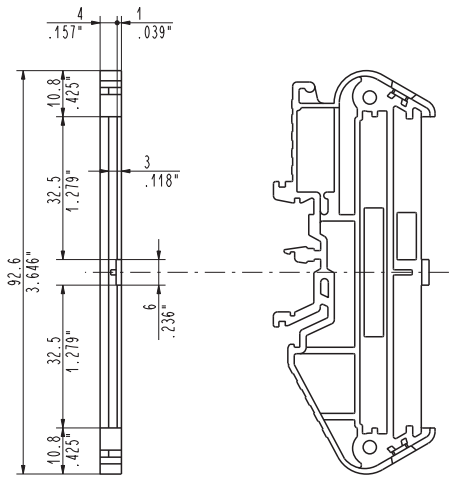

STC072TSX0

Lateral Element with Right Rail Hook

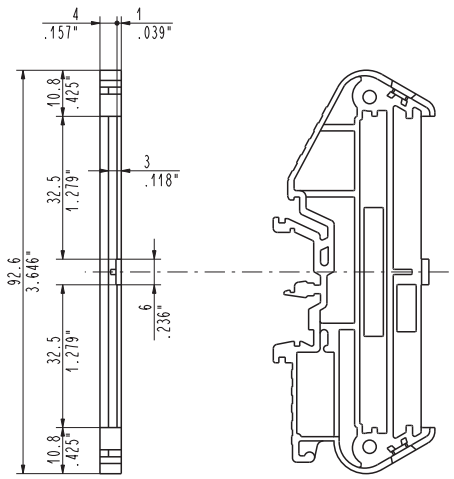

STC072TDX0

STC072TSX0 / STC072TDX0

Lateral Elements with Left and Right Rail Hook

Lateral Elements with Left and **Right Rail Hook** can be used to hook the **Extruded Profile** to the DIN rails to hold PCB Supports that are quite short and quite lightweight. Alternatively, it's possible to use 2 **Lateral Elements Without Hooks** by placing the required number of **DIN Rail Hooks** directly under the Extruded Profile.

To fasten each Lateral Element to the Extruded Profile, 2 **Screws** must be used.
For customer convenience, the Support can be supplied with one Lateral Element already assembled. This option, if desired, must be clearly requested.

Description	Part-Number	Pcs / pack
Left Lateral Element with Rail Hook	STC072TSX0	50
Right Lateral Element with Rail Hook	STC072TDX0	50
Head Without Rail Hook	STC072T000	100
DIN Rail Hook	STC072P011	50
Screw for Head Fastening	STC000V015	100
Screw for Head Fastening	STC000V025	100

Lateral Element without Rail Hook

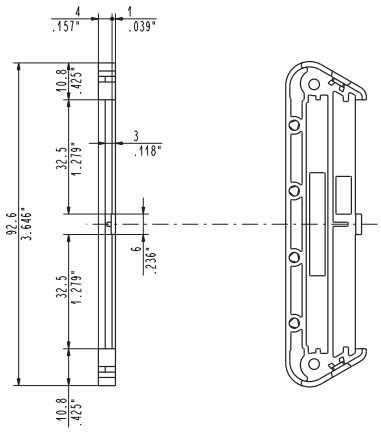

STC072T000

DIN Rail Hook

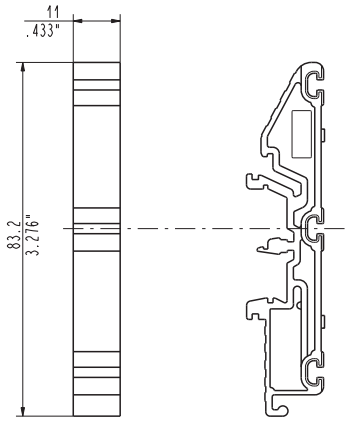

STC072P011

Bracket for Mounting on the Wall

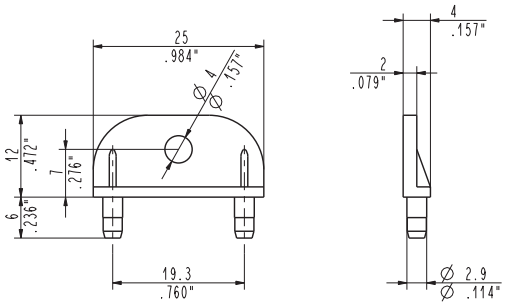

STC000F000

Size Adapter for 2.677 in (68 mm) PCB

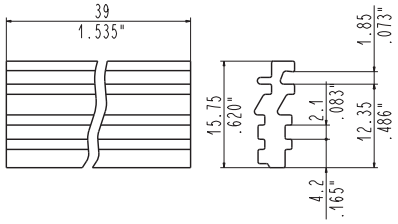

STC072A026

STC000F000

UL 94 V-0 Self-Extinguishing Polyamide PA 6.6

A **Bracket for Mounting on the Wall** can be used to fasten the PCB Support to a flat surface rather than hooking it to a DIN rail.
The **Bracket** is suitable only for **Lateral Elements Without a Rail Hook**. One Bracket for each Lateral Element is needed and it is snapped on.
The **Bracket for Mounting on the Wall** can be used with both **STC072** and **STC107** Series.

STC072A026

The **Adapter for 68 mm (2.677 in) PCBs** is necessary when mounting 68 mm (2.677 in) wide boards on the **STC072** Series Supports. It must be inserted lengthwise into the Profile , in the desired side and it doesn't need fastening.
The board will be offset in relation to the centerline of the profile. This position must be taken into consideration if the Protection Cover is used.
The **Adapter for 2.677 in (68 mm) PCBs** is available in **1.024 in (26 mm) standard length**.
It must be used in a quantity that does not exceed the correspondent length of the Profile.

Description	Part-Number	Pcs / pack
Bracket for Mounting on the Wall	STC000F000	100
Size of STD Adapter for 68 mm (2.677 in) Boards	STC072A026	50

In the following table some indicative examples of configuration are shown, as might occur in some practical applications.

Example	Extruded Profile	Left Lat. Element with Rail Hook	Right Lat. Element with Rail Hook	Head Without Rail Hook	DIN Rail Hook	Screw for Head Fastening	Bracket for Mounting on the Wall
	STC072_ _ _ _	**STC072TSX0**	**STC072TDX0**	**STC072T000**	**STC072P011**	**STC000V015**	**STC000F000**
Lightweight	1	1	1			4	
Medium Weight	1			2	1	4	
Medium-Heavyweight	1			2	2	4	
Heavyweight	1			2	3	4	
Support to be fastened on a flat surface	1			2		4	2 ÷ 4

STC 107

Extruded Supports

Width of PCB:
100 mm - 107.5 mm (3.937 in - 4.232 in)

Support Type:
EXTRUDED

Standard Colour:
GREEN

Thickness of PCB:
1.6 ÷ 2.8 mm (.063 ÷.110 in)

STC107

Extruded Supports for Boards 107.5 mm (4.232 in) Wide

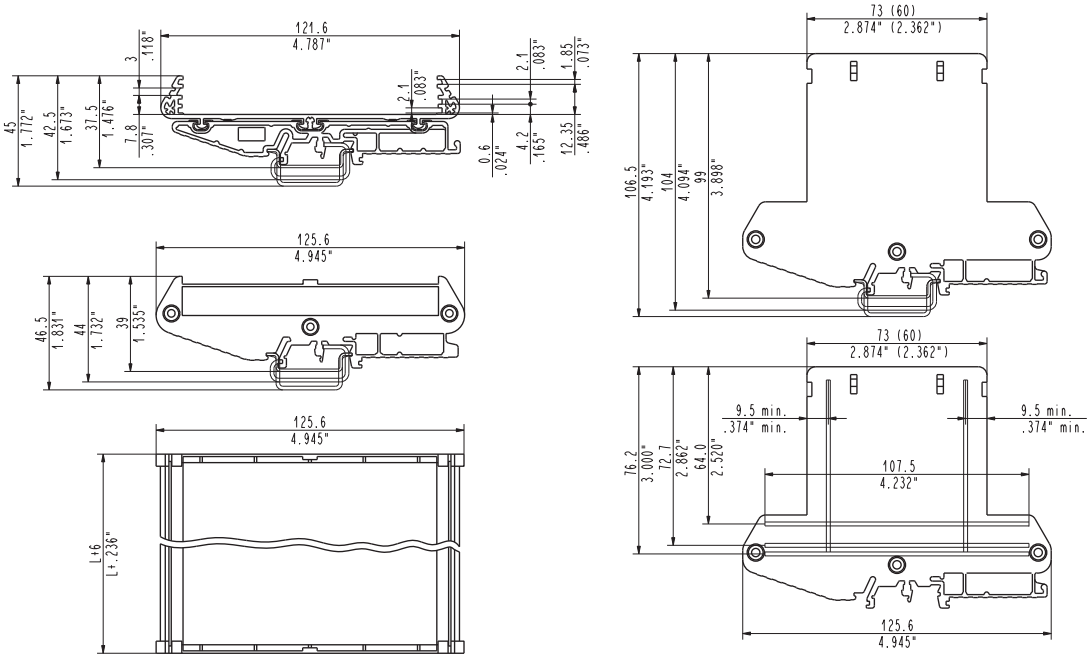

STC PARTS

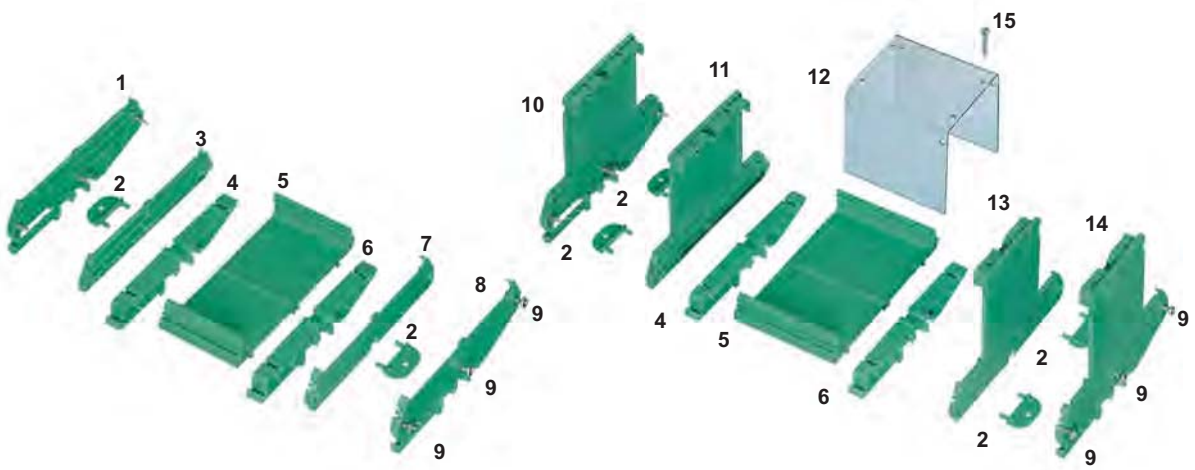

1	STC107TSX0
2	STC000F000
3	STC107T000
4	STC107P011
5	STC107S_ _ _
	STC1072000
	STC107L_ _ _
6	STC107P011
7	STC107T000
8	STC107TDX0
9	STC000V015
10	STC107TS73
11	STC107T073
12	STC107C_ _ _
	STC107D_ _ _
13	STC107T060
14	STC107TD60
15	STC000VC15

Custom sized Cut Extruded Profile

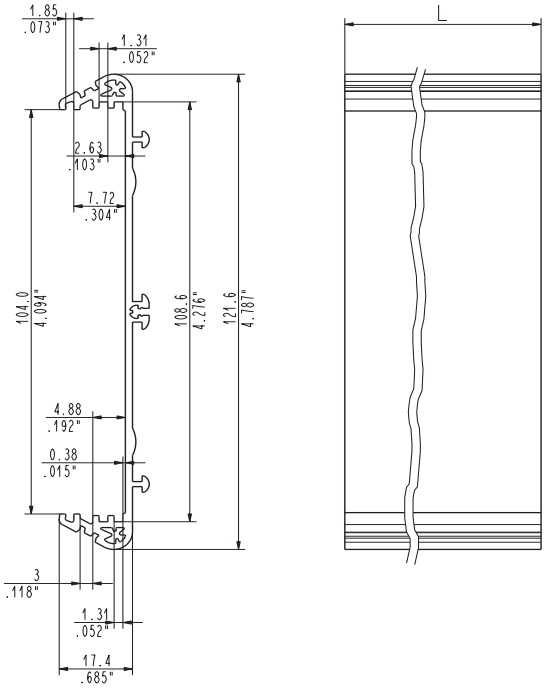

STC107S _ _
STC1072000
STC107L_ _ _

STC107S _ _ / STC1072000 / STC107L_ _ _

Custom sized Cut Extruded Profile

For a Custom Sized Cut Profile, the length of the Central Body must be equal to the length of the PCB minus 3.5 mm (.138 inch). It's advised to round off the figure to the higher whole number.

The length of the support, including the Lateral Elements, is equal to the length of the Profile plus 6 mm (.236 inch).

Cut Profile sizes L		Part-Number	Pcs / pack	For PCB		Support Length	
(mm)	(in)			(mm)	(in)	(mm)	(in)
35,00	1.378	STC107S035	50	38.50	1.516	41.00	1.614
51,50	2.028	STC107S051	50	55.00	2.165	57.50	2.264
70,00	2.756	STC107S070	50	73.50	2.894	76.00	2.992
86,50	3.406	STC107S086	50	90.00	3.543	92.50	3.642
105,00	4.134	STC107S105	50	108.50	4.272	111.00	4.370
121,50	4.783	STC107S121	50	125.00	4.921	127.50	5.020
140,00	5.512	STC107S140	40	143.50	5.650	146.00	5.748
156,50	6.161	STC107S156	50	160.00	6.299	162.50	6.398
175,00	6.890	STC107S175	40	178.50	7.026	181.00	7.126
191,50	7.539	STC107S191	50	195.00	7.677	197.50	7.776
210,00	8.268	STC107S210	50	213.50	8.406	216.00	8.504
226,50	8.898	STC107S226	50	230.00	9.055	232.50	9.154
245,00	9.646	STC107S245	50	248.50	9.783	251.00	9.882
261,50	10.295	STC107S261	50	265.00	10.433	267.50	10.531
280,00	11.024	STC107S280	50	283.50	11.161	286.50	11.260
Profile for PCB with L = 2 m (78.740 in)		STC1072000	10	--------	--------	--------	--------
Custom		STC107L_ _ _	100	L + 3.5	L +.137	L + 6	L +.236

STC 107

Extruded Supports

Left Lateral Element with Rail Hook

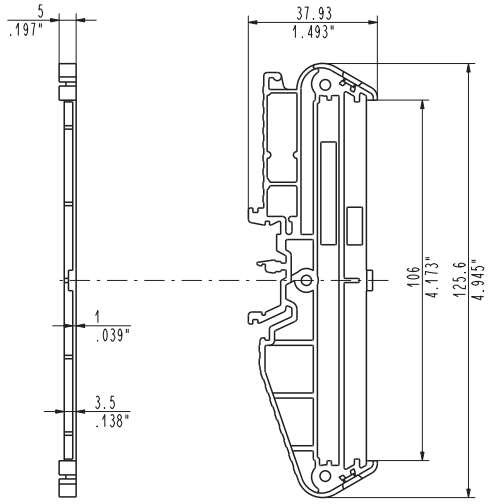

STC107TSX0

Right Lateral Element with Rail Hook

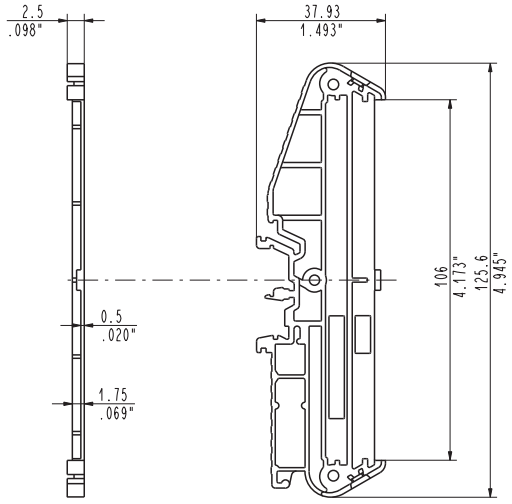

STC107TDX0

STC107TSX0 / STC107TD0

Lateral Elements with Left and Right Rail Hook

Lateral Elements with Left and **Right Rail Hook** can be used to hook the **Extruded Profile** to the DIN rails to hold PCB Supports that are quite short and quite lightweight. Alternatively, it's possible to use 2 **Lateral Elements Without Hooks** by placing the required number of **DIN Rail Hooks** directly under the Extruded Profile.

To fasten each Lateral Element to the Extruded Profile, 3 **Screws** must be used.
For customer convenience, the Support can be supplied with one Lateral Element already assembled. This option, if desired, must be clearly requested.

Description	Part-Number	Pcs / pack
Left Lateral Element with Rail Hook	STC107TSX0	50
Right Lateral Element with Rail Hook	STC107TDX0	50
Head Without Rail Hook	STC107T000	100
DIN Rail Hook	STC107P011	100
Screw for Head Fastening (L=15mm)	STC000V015	100
Screw for Head Fastening (L=15mm)	STC000VC15	100
Screw for Head Fastening (L=15mm)	STC000V025	100

Head Without Rail Hook

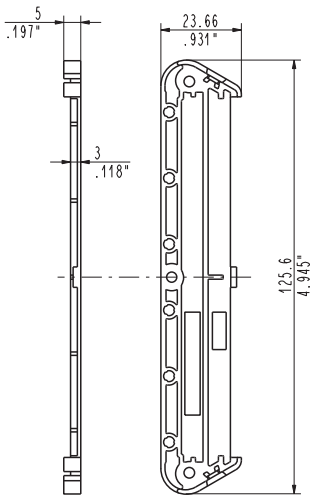

STC107T000

DIN Rail Hook

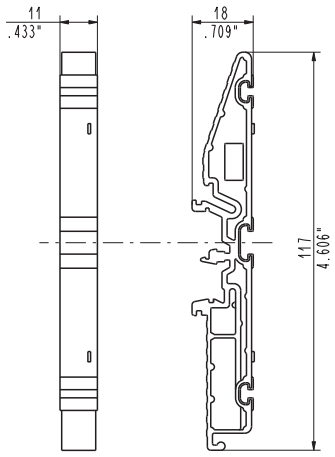

STC107P011

Left High Lateral Element with Rail Hook

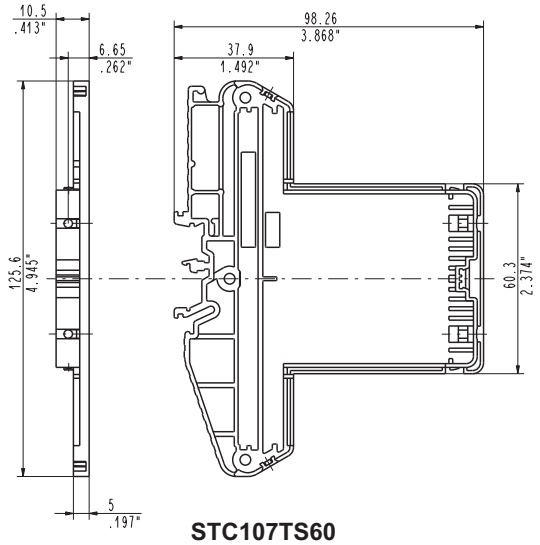

STC107TS60

Left High Lateral Element with Rail Hook

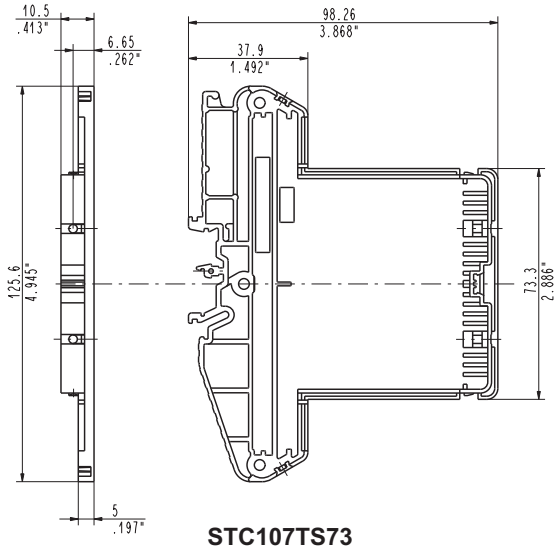

STC107TS73

Right High Lateral Element with Rail Hook

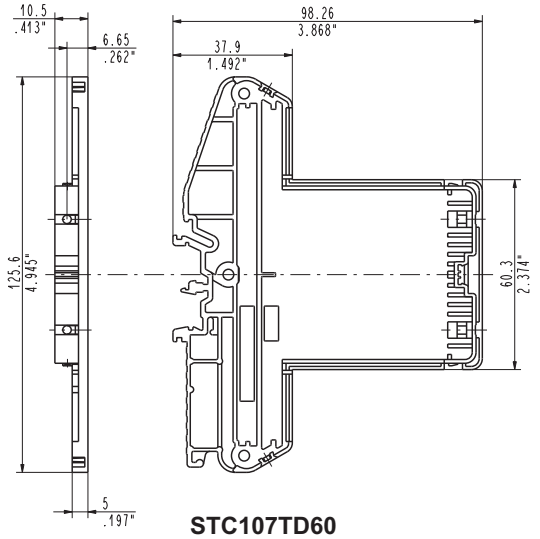

STC107TD60

Right High Lateral Element with Rail Hook

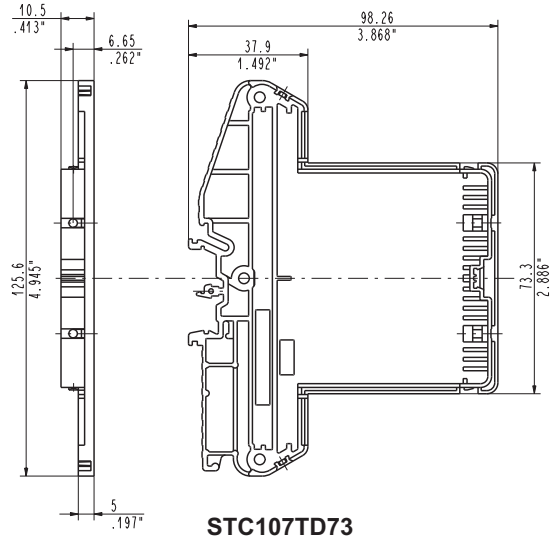

STC107TD73

High Lateral Element Without Rail Hook

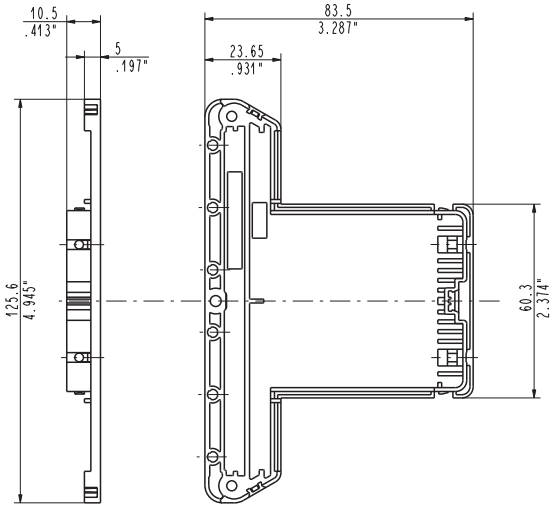

STC107T060

High Lateral Element Without Rail Hook

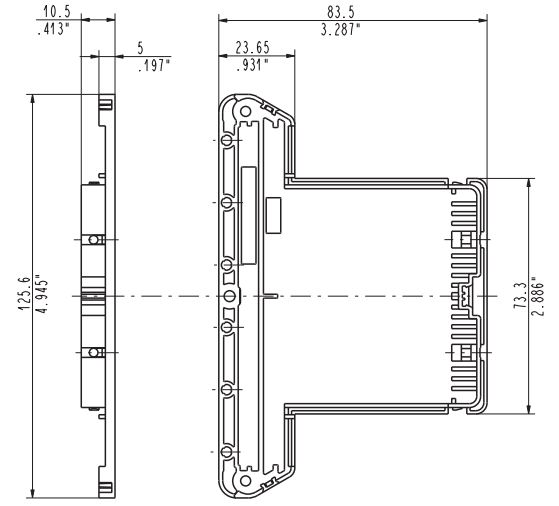

STC107T073

Extruded Supports

STC107T___

High Lateral Elements

High Lateral Elements are necessary if the transparent **Protection Cover** is used and they **differ if a 60 mm (2.362 in) wide Cover or a 73 mm (2.874 in) wide Cover is used**. 4 **Screws** are required to fasten each Protection Cover to the two High Lateral Elements.
High Lateral Elements with Left and **Right Rail Hook** can be used to fasten the **Extruded** PCB Supports that are quite short and quite lightweight to the DIN rail. Alternatively, it's possible to use 2 **Elements Without Hooks** by placing the required number of **DIN Rail Hooks** directly under the Extruded Profile.
To fasten each Lateral Element to the Extruded Profile, 3 **Screws** must be used.
For customer convenience, the Support can be supplied with one Lateral Element already assembled. This option, if desired, must be clearly requested.

Description	Part-Number	Pcs / pack
Left High Lateral Element with Rail Hook	STC107TS60	25
Left High Lateral Element with Rail Hook	STC107TS73	25
Right High Lateral Element with Rail Hook	STC107TD60	25
Right High Lateral Element with Rail Hook	STC107TD73	25
High Lateral Element Without Rail Hook	STC107T060	100
High Lateral Element Without Rail Hook	STC107T073	100

Bracket for Mounting on the Wall

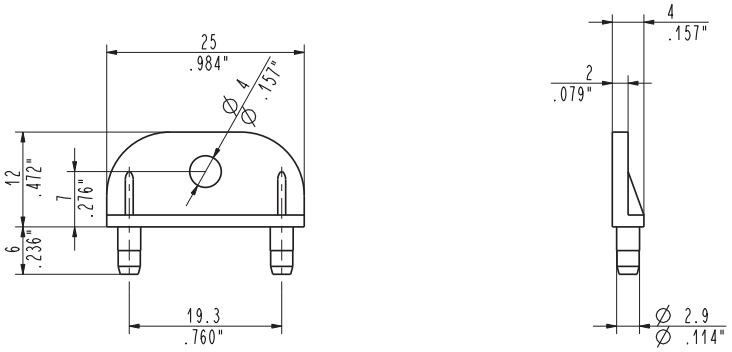

STC000F000

STC000F000

Bracket for Mounting on the Wall

A **Bracket for Mounting on the Wall** can be used to fasten the PCB Support to a flat surface rather than hooking it to a DIN rail.
The **Bracket** is suitable only for the **Lateral Elements Without a Rail Hook**, by snapping on, one per Lateral Element.

The **Bracket for Mounting on the Wall** can be used with both **STC072** and **STC107** Series.

Description	Part-Number	Pcs / pack
Bracket for Mounting on the Wall	STC000F000	100

Custom sized 60 mm (2.362 in) Protection Cover

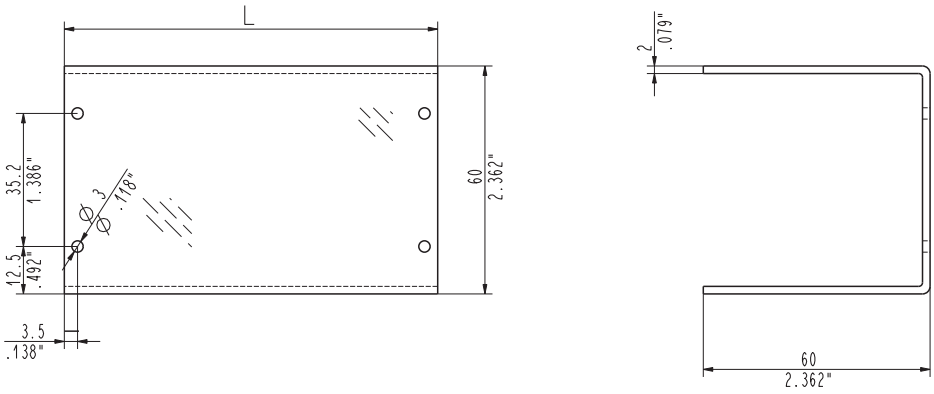

STC107C_ _ _

Custom sized 73 mm (2.874 in) Protection Cover

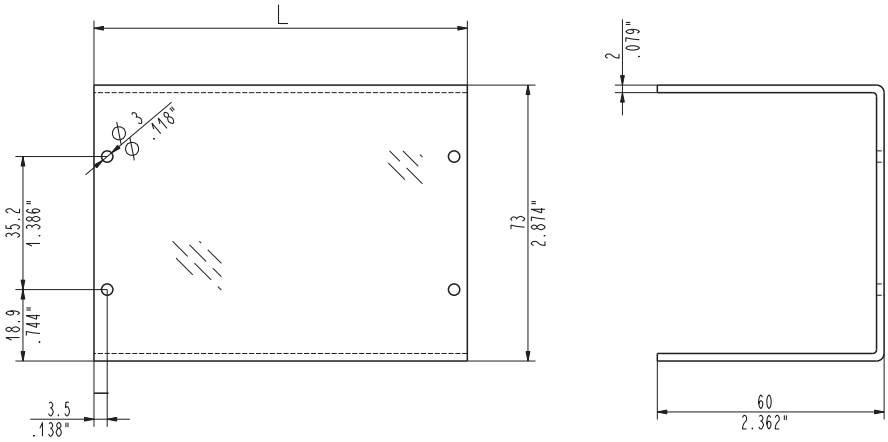

STC107D_ _ _

STC107C___ / STC107D___

Custom sized Protection Cover

For Custom sized Protection Cover, length of the piece must be equal to the corresponding length of the Profile, that is the length of the PCB minus 3.5 mm (.137 in). It's advised to round off the figure to the higher whole number.

The Length of the Support, including the Lateral Elements, is equal to the Length of the Profile plus 6 mm (.236 in).

L		Part-Number	Pcs / pack	For PCB		Support Length	
				(mm)	(in)	(mm)	(in)
Custom size	(*for 73 mm (2.874 in) Protection Cover*)	STC107D___	50	L + 3.5	L +.137	L + 6	L +.236
70 mm	(for 60 mm (*2.874 in) Protection Cover*)	STC107C070	50	73.5	2.894	76	2.992
Custom size	(*for 73 mm (2.874 in) Protection Cover*)	STC107D___	50	L + 3.5	L +.137	L + 6	L +.236
70 mm	(*for 73 mm (2.874 in) Protection Cover*)	STC107D070	50	73.5	2.894	75	2.992

Extruded Supports

Size Adapter for 100 mm (3.937 in) PCBs

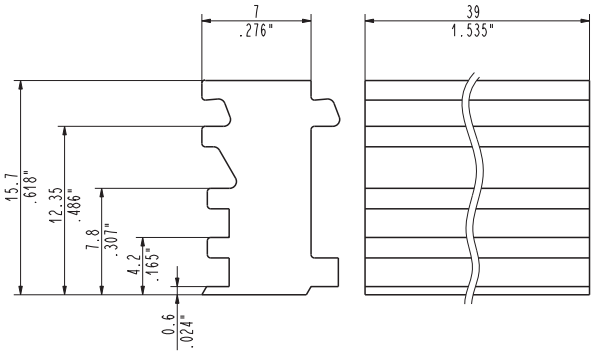

STC107A039

STC107A039

Adapter for 100 mm (3.937 in) PCBs

The **Adapter for 100 mm (3.937 in) PCBs** is necessary when mounting boards 100 mm (3.937 in) wide on the **STC107** Series Supports. It must be inserted in the Profile lengthwise in the desired side and it doesn't need fastening.

The board will be offset in relation to the centerline of the profile. This position must be taken into consideration if the Protection Cover is used.
The **Adapter for 100 mm (3.937 in) PCBs** is available in **1.535 in (39 mm) standard length**.
It must be used in a quantity that does not exceed the corresponding length of the Profile.

Description	Part-Number	Pcs / pack
Size of STD Adapter for 3.937 in (100 mm) PCB	STC107A039	50

In the following tables some indicative examples of configuration are shown, as might occur in some practical applications.

Example	Extruded Profile	Left Lat. Element	Right Lat. Element	Head Without	DIN Rail	Screw for Head	Bracket for
Without Protection		with Rail Hook	with Rail Hook	Rail Hook	Hook	Fastening	Mounting on the Wall
	STC107_ _ _ _	**STC107TSX0**	**STC107TDX0**	**STC107T000**	**STC107P011**	**STC000V015**	**STC000F000**
Lightweight	1	1	1			6	
Medium Weight	1			2	1	6	
Medium-Heavyweight	1			2	2	6	
Heavyweight	1			2	3	6	
Support to be fastened on a flat surface	1			2		6	2 ÷ 6

Example	Extruded Profile	High Left Lat. Element	High Right Lat. Element	High Head Without	DIN Rail	Screw for Head	Screw for	Bracket for
With Protection	Protection Cover	with Rail Hook	with Rail Hook	Rail Hook	Hook	Fastening	Protection Cover	Mounting on the Wall
	STC107_ _ _ _	**STC107TS_ _**	**STC107TD_ _**	**STC107T0_ _**	**STC107P011**	**STC000V015**	**STC000VC15**	**STC000F000**
Lightweight	1 + 1	1	1			6	4	
Medium Weight	1 + 1			2	1	6	4	
Medium-Heavyweight	1 + 1			2	2	6	4	
Heavyweight	1 + 1			2	3	6	4	
Support to be fastened on a flat surface	1 + 1			2		6	4	2 ÷ 6

EXAMPLES OF INSTALLATION

STC107 Extruded support

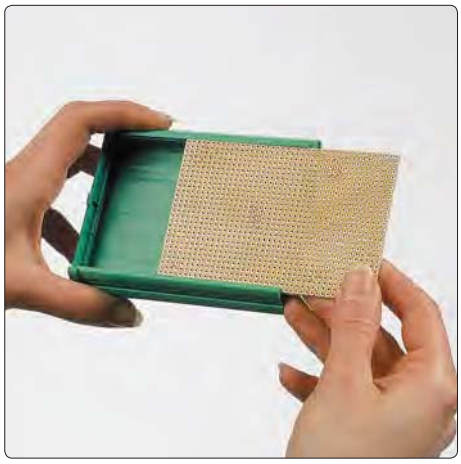

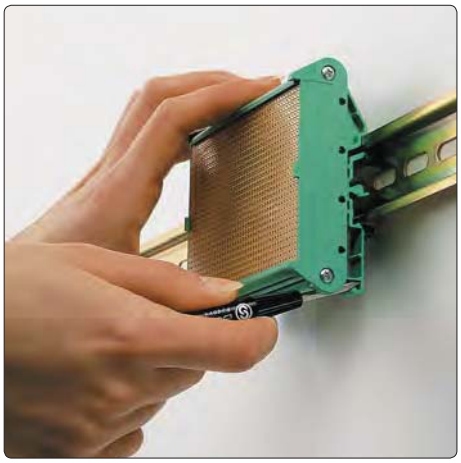
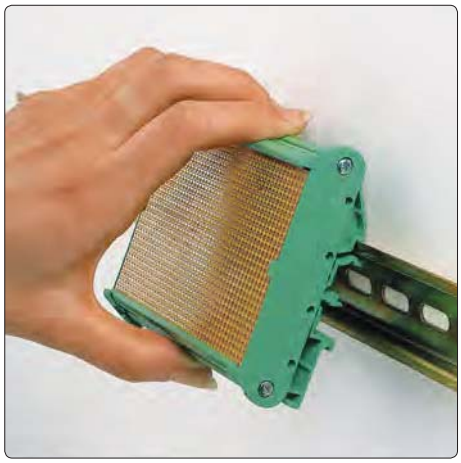
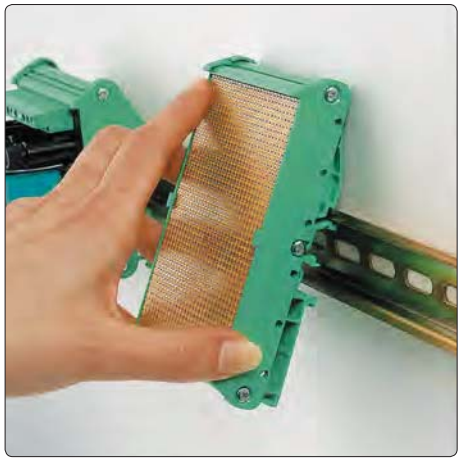
STC107 Extruded support