FLATCABLE CONNECTORS

Low profile header – angled

RoHS compliant

DESCRIPTION

- Solder pin
- Pin length 2.9 mm alternative 4.5 mm (*) on request
- 10 to 64 positions
- Center polarization
- Space saving version
- Clip latches need to be ordered separately

PRODUCT DRAWING

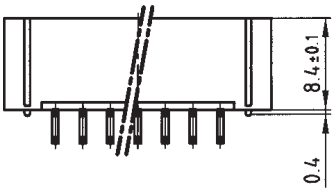

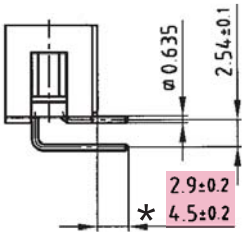

PCB-hole pattern

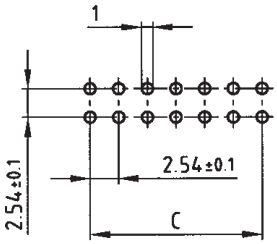

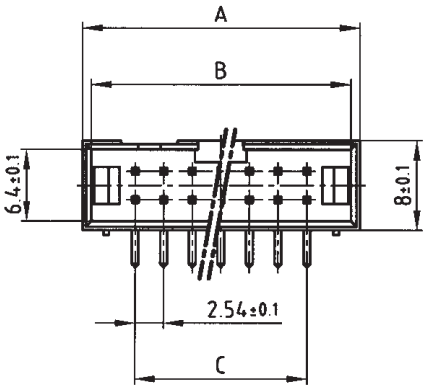

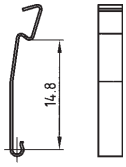

Clip latches
Part no. 140 X 10039 X

No. of Pos.	A ± 0.2	B ± 0.1	C ± 0.1
10	19.50	17.90	4 x 2.54 = 10.16
14	24.60	23.00	6 x 2.54 = 15.24
16	27.20	25.60	7 x 2.54 = 17.78
20	32.30	30.70	9 x 2.54 = 22.86
26	39.90	38.30	12 x 2.54 = 30.48
34	50.10	48.50	16 x 2.54 = 40.64
40	57.80	56.20	19 x 2.54 = 48.26
50	70.50	68.90	24 x 2.54 = 60.96
64	89.10	86.40	31 x 2.54 = 78.74

(Dim. = mm)

ORDER DATA

No. of Pos.	Pin length 2.9 mm	Pin length 4.5 mm*
10	141 A 11909 X	141 A 11999 X
14	141 A 11919 X	141 A 12009 X
16	141 A 11929 X	141 A 12019 X
20	141 A 11939 X	141 A 12029 X
26	141 A 11949 X	141 A 12039 X

No. of Pos.	Pin length 2.9 mm	Pin length 4.5 mm*
34	141 A 11959 X	141 A 12049 X
40	141 A 11969 X	141 A 12059 X
50	141 A 11979 X	141 A 12069 X
60	141 A 12399 X	141 A 12459 X