FLATCABLE CONNECTORS

Plug connector – straight

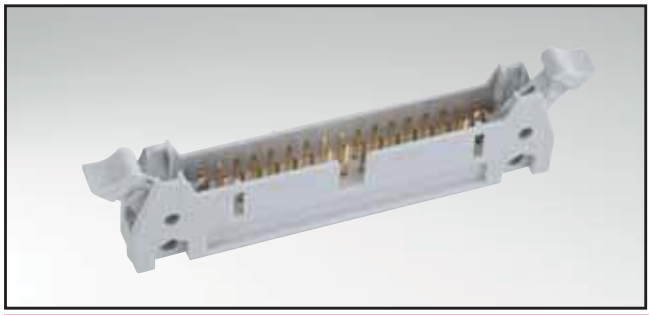

RoHS compliant

DESCRIPTION

- Solder pin
- Pin length 2.9 mm alternative 4.5 mm (*) on request
- 10 to 64 positions
- Center polarization
- Available with long, short and without latches
- Long latches for socket connector with strain relief

PRODUCT DRAWING

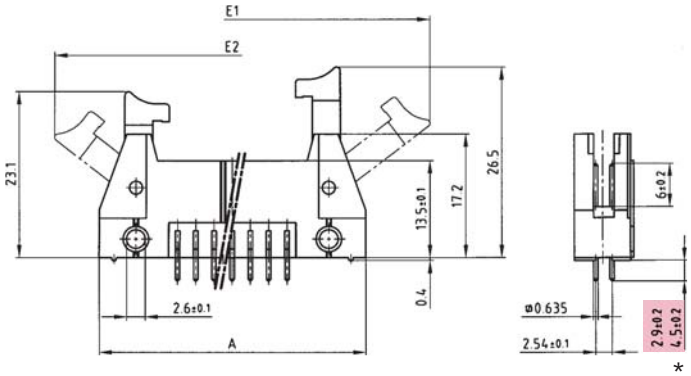

PCB-hole pattern

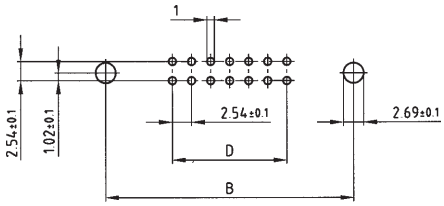

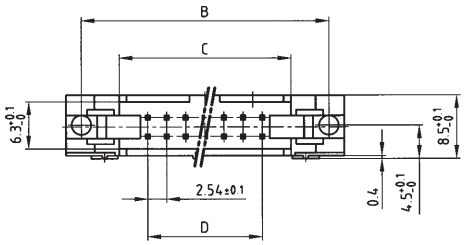

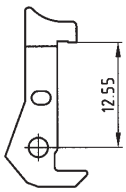

Long latches
Part no. 140 X 10019 X

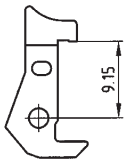

Short latches
Part no. 140 X 10029 X

No. of Pos.	A ± 0.2	B ± 0.1	C ± 0.2	D ± 0.1	E_1	E_2
10	32.00	27.94	17.82	4 x 2.54 = 10.16	50.00	44.50
14	37.08	33.02	22.90	6 x 2.54 = 15.24	55.00	49.50
16	39.62	35.56	25.44	7 x 2.54 = 17.78	57.60	52.10
20	44.70	40.64	30.52	9 x 2.54 = 22.86	62.50	57.00
26	52.32	48.26	38.14	12 x 2.54 = 30.48	70.10	64.60
34	62.48	58.42	48.30	16 x 2.54 = 40.64	80.30	74.80
40	70.10	66.04	55.92	19 x 2.54 = 48.26	87.90	82.40
50	82.80	78.74	68.62	24 x 2.54 = 60.96	100.70	95.20
60	95.50	91.44	81.32	29 x 2.54 = 73.66	113.40	107.90
64	100.58	96.52	86.40	31 x 2.54 = 78.74	118.52	113.02

(Dim. = mm)

ORDER DATA

	WITHOUT LATCHES		WITH SHORT LATCHES		WITH LONG LATCHES	
No. of Pos.	Pin length 2.9 mm	Pin length 4.5 mm*	Pin length 2.9 mm	Pin length 4.5 mm*	Pin length 2.9 mm	Pin length 4.5 mm*
10	141 A 10019 X	141 A 10109 X	141 A 10199 X	141 A 10289 X	141 A 10379 X	141 A 10469 X
14	141 A 10029 X	141 A 10119 X	141 A 10209 X	141 A 10299 X	141 A 10389 X	141 A 10479 X
16	141 A 10039 X	141 A 10129 X	141 A 10219 X	141 A 10309 X	141 A 10399 X	141 A 10489 X
20	141 A 10049 X	141 A 10139 X	141 A 10229 X	141 A 10319 X	141 A 10409 X	141 A 10499 X
26	141 A 10059 X	141 A 10149 X	141 A 10239 X	141 A 10329 X	141 A 10419 X	141 A 10509 X
34	141 A 10069 X	141 A 10159 X	141 A 10249 X	141 A 10239 X	141 A 10429 X	141 A 10519 X
40	141 A 10079 X	141 A 10169 X	141 A 10259 X	141 A 10349 X	141 A 10439 X	141 A 10529 X
50	141 A 10089 X	141 A 10179 X	141 A 10269 X	141 A 10359 X	141 A 10449 X	141 A 10539 X
60	141 A 10099 X	141 A 10189 X	141 A 10279 X	141 A 10369 X	141 A 10459 X	141 A 10549 X
64	141 A 12289 X	141 A 12429 X	141 A 12319 X	141 A 12329 X	141 A 12339 X	141 A 12349 X