FLATCABLE CONNECTORS

PCB connector – 10 to 64 positions

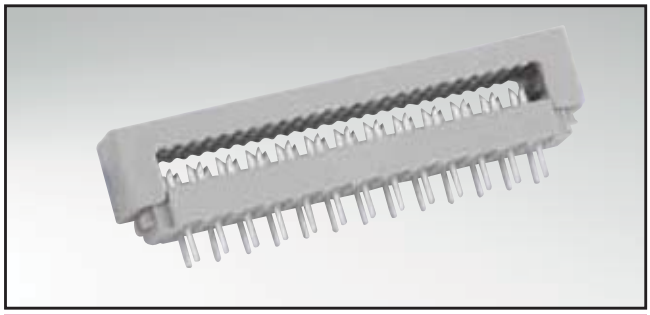

RoHS compliant

DESCRIPTION

- Insulation displacement termination (IDC)
- Contact spacing 2.54 mm
- Contact plating: gold or tin plated

PRODUCT DRAWING

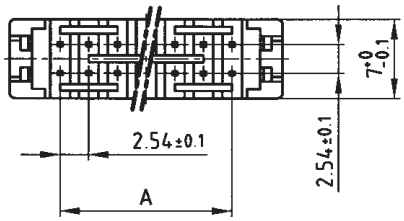

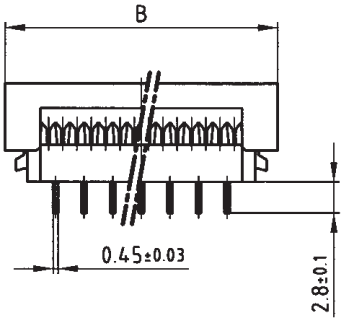

PCB-hole pattern

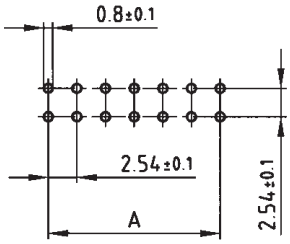

pre-pressed

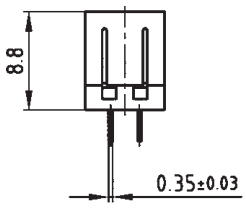

pressed

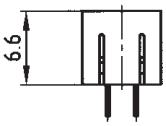

No. of Pos.	A ± 0.1	B ± 0.2
10	4 x 2.54 = 10.16	19.15
14	6 x 2.54 = 15.24	24.25
16	7 x 2.54 = 17.78	26.82
20	9 x 2.54 = 22.86	31.90
26	12 x 2.54 = 30.48	39.50
34	16 x 2.54 = 40.64	49.68
40	19 x 2.54 = 48.26	57.30
50	24 x 2.54 = 60.96	70.00
60	29 x 2.54 = 73.66	82.75
64	31 x 2.54 = 78.74	87.78

(Dim. = mm)

ORDER DATA

No. of Pos.	tin plated
10	220 F 10169 X
14	220 F 10179 X
16	220 F 10189 X
20	220 F 10199 X
26	220 F 10209 X

No. of Pos.	tin plated
34	220 F 10219 X
40	220 F 10229 X
50	220 F 10239 X
60	220 F 10249 X
64	220 F 10259 X